SBCA Research Report

Use of "L" Type Partition Intersections in Fire-Rated Assemblies

SRR No. 1304-03

Structural Building Components Association (SBCA)

August 10, 2018

SBCA is an APPROVED SOURCE

This research report is based on practical scientific research (literature review, testing, analysis, etc.). This research report complies with the following sections of the building code:

- *IBC* Section 104.11.1 and Section 1703.4.2 – "**Research reports.** Supporting data, where necessary to assist in the approval of materials or assemblies not specifically provided for in this code, shall consist of valid research reports from *approved sources*."
- *IBC* Section 202 – "**APPROVED SOURCE.** An independent person, firm or corporation, *approved* by the *building official*, who is competent and experienced in the application of engineering principles to materials, methods or systems analyses."

Structural Building Components Association (SBCA) | 6300 Enterprise Lane, Madison, WI 53719 | 608-274-4849 | sbcindustry.com

Table of Contents

Introduction:

This research report evaluates the use of L-shaped partition intersections as an equivalent alternative to the U-shaped intersections typically shown in fire-resistive assembly evaluation reports. Performance of L-shaped wall intersections is evaluated as a component of maximum one-hour-rated wall assemblies. The UL356 assembly is used as an example. Use of the L-shaped partition wall intersection is permitted for other fire-resistant rated wall assemblies provided the construction meets the requirements of IBC Section 722 for calculating the fire resistance of wall assemblies with a maximum fire-resistance rating of one hour.

Key Definitions:

AUTHORITY HAVING JURISDICTION: (*IBC* Section 104.1)
The building code official authorized and directed to enforce the provisions of a building code who also has the authority to render interpretations of this code and to adopt policies and procedures in order to clarify the application of its provisions.

BUILDING DESIGNER: (*ANSI/TPI 1* Section 2.2)
The owner of the building or the person that contracts with the owner for the design of the framing structural system and/or who is responsible for the preparation of the construction documents. When mandated by the legal requirements, the Building Designer shall be a registered design professional.

FIRE-RESISTANCE RATING: (*IBC* Section 202)
The period of time a building element, component or assembly maintains the ability to confine a fire, continues to perform a given structural function, or both, as determined by the tests or the methods based on tests prescribed in Section 703.

Background:

The justification for the use of this alternate partition intersection is based on the *IBC* Section 722 calculation methodology. Additional information supporting the use of this method is presented as well. The result of the calculation methodology analysis method is the assignment of time to the various layers of the wall assembly. The time assigned is summarized in *IBC* Table 722.6.2(1).

Calculation Methodology for Equivalent Fire Endurance Assembly Performance

The building code has long recognized that there will be instances when materials and fire- resistance-rated assemblies may not be readily available from prescriptive tables and tested assemblies, or that construction may vary from the original fire tests. *IBC* Section 722 contains the following language:

> **722.1 General.** The provisions of this section contain procedures by which the fire resistance of specific materials or combinations of materials is established by calculations….
>
> **722.6 Wood assemblies.** The provisions of this section contain procedures by which the fire-resistance ratings of wood assemblies are established by calculations.
>
> **722.6.1.1 Maximum fire-resistance rating.** Fire resistance ratings calculated for assemblies using the methods in Section 722.6 shall be limited to not more than 1 hour.
>
> **722.6.2.1 Fire-resistance rating of wood frame assemblies.** The fire-resistance rating of a wood frame assembly is equal to the sum of the time assigned to the framing members and the time assigned for additional contribution by other protective measures such as insulation. The membrane on the unexposed side shall not be included in determining the fire resistance of the assembly.

Theoretical methods offer an alternative to full-scale fire tests using procedures defined in BOCA International's *Guidelines for Determining Fire Resistance Ratings of Building Elements*. These procedures date back to all legacy codes and have been incorporated into the ICC family of codes as a credible means of creating fire-rated assemblies. For example:

Section 704.1.1 of the *BOCA National Building Code/1996*, Section 703.3 of the *1994 Uniform Building Code*, and Section 701.2.1 of the *Standard Building Code/1994* permit fire-resistance ratings of building assemblies and structural elements to be determined in accordance with an approved analytical method.

One theoretical method known as the “Ten Rules of Fire Endurance Ratings” was published by T.Z. Harmathy in the May 1965 edition of Fire Technology. Harmathy’s Rules provide a foundation for extending fire endurance assembly data. These rules will be used extensively in this report.

Fire endurance assembly calculations are also delineated in “The Component Additive Method for Calculating and Demonstrating Assembly Fire,” *Endurance (DCA 4 – CAM for Calculating and Demonstrating Assembly Fire Endurance by the American Wood Council)*.

The assembly listed in the *UL Fire Resistance Directory*, Design Number L538 was calculated using the component additive method (CAM) principles that will be used here and adopted into a UL directory assembly. The telltale sign that this is a calculated assembly is that the finish rating for this assembly states that it is “more than 90 minutes." The calculations and analysis used in this report are based upon time assigned to wall assembly components per 2018 *IBC* Section 722.6.

U-Shaped and L- Shaped Partition Comparison

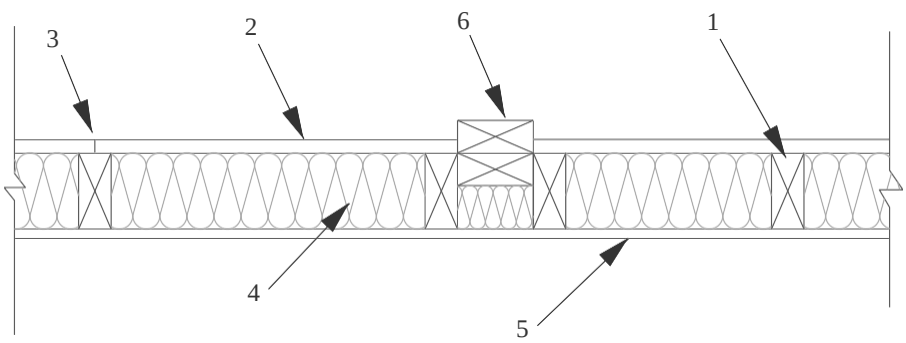

Figure 1: U-shaped Partition Intersection

Figure 1 shows the construction of a one-hour fire-resistive-rated wall assembly as shown in UL356 using a U-shaped partition intersection.

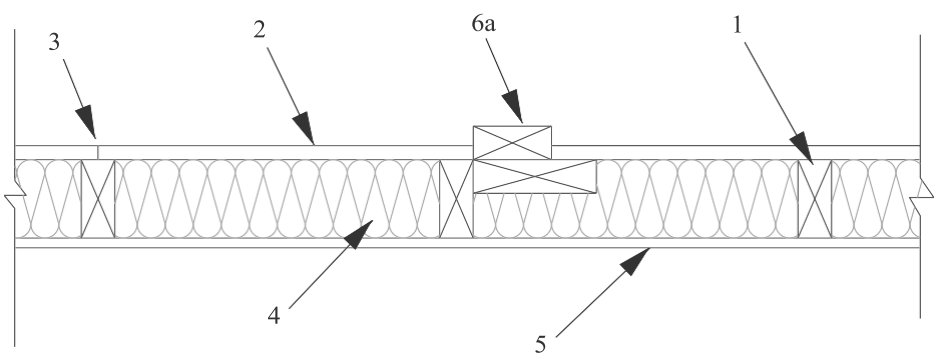

Figure 2: L-Shaped Partition Intersection

Figure 2 shows an identical wall assembly using the L-shaped partition intersection. Parts 1-5 as depicted in Figure 1 and Figure 2 are identical and described as follows:

- Wood Studs – Nominal 2x4 spaced a maximum of 16" o.c.
- Wallboard Membranes – 5/8" gypsum wallboard (GWB). GWB installed over framing or furring shall be installed so that all edges are supported, except 5/8" Type X GWB shall be permitted to be installed horizontally with the horizontal joints staggered 24" each side and unsupported but finished in accordance with *IBC* Table 722.6.2(1).
- Joints and Nail-Heads – Joints covered with joint compound and tape. Nail heads covered with joint compound.

- Additional Protection – Spaces between the studs are to be completely filled with glass fiber mineral wool batts weighing not less than 2 lbs per cubic foot (0.6 lb per square foot of wall surface) or rockwool or slag material wool batts weighing not less than 3.3 lbs per cubic foot (1 lb per square foot of wall surface), or cellulose insulation having a nominal density not less than 2.6 lbs per cubic foot.

- Membrane on the unexposed side shall not be included in determining the fire resistance of the assembly. When dissimilar membranes are used on a wall assembly, the calculation shall be made from the least fire-resistant (weaker) side, if applicable.

Item 6 in Figure 1 (U-shaped partition intersection) is described as follows:

Non-Bearing Wall Partition Intersection

- Two nominal 2" x 4" studs or nominal 2" x 6" studs nailed together with one 10d (3" x 0.131") nail spaced a maximum of 16" o.c. vertically and fastened to one side of the minimum 2" x 4" stud with one 10d (3" x 0.131") nail spaced at 16" o.c. vertically.

- Intersection between partition wood studs to be flush with the 2" x 4" studs.

- The wall partition studs are to be framed with a second 2" x 4" wood stud fastened with 10d (3" x 0.131") nails spaced a maximum of 16 " o.c. vertically.

- Maximum one non-bearing wall partition intersection per stud cavity. Non-bearing wall partition stud depth (Figure 2, item 6a) shall be at a minimum equal to the depth of the bearing wall stud (Figure 2, item 1).
- Item 6a in Figure 2 (L-shaped partition intersection) is described as follows:

Non-Bearing Wall Partition Intersection

- One nominal 2" x stud a minimum of one size larger than the studs in the incoming partition wall and nailed to the end stud of the incoming partition wall with one row 10d (3" x 0.131") nails spaced 16" o.c. vertically and fastened to one side of the minimum 2" x 4" stud with one row 10d (3" x 0.131") nails spaced at 16" o.c. vertically.

- Intersection between these partition wood studs to be flush with the 2" x 4" studs.

- Maximum one non-bearing wall partition intersection per stud cavity.

- Maximum one non-bearing wall partition intersection per stud cavity. Non-bearing wall partition stud depth (Figure 2, item 6a) shall be at a minimum equal to the depth of the bearing wall stud (Figure 2, item 1).

Application:

Membrane Protection

The critical feature of any fire endurance assembly is the performance of the gypsum membrane. In order for an assembly to obtain a given fire endurance resistance performance, the membrane must stay intact for as long as possible prior to failing. *IBC*-specific information pertaining to fire endurance membranes and their performance, with respect to use with a wall system are *IBC* Section 722.6.2.2, (time assigned to membranes, Table 722.6.2(1)) indicates the time assigned to membranes on the fire-exposed side.

DESCRIPTION OF FINISH	TIME[e] (minutes)
$^{3}/_{8}$-inch wood structural panel bonded with exterior glue	5
$^{15}/_{32}$-inch wood structural panel bonded with exterior glue	10
$^{19}/_{3}$ -inch wood structural panel bonded with exterior glue	15
$^{3}/_{8}$-inch gypsum wallboard	10
$^{1}/_{2}$ -inch gypsum wallboard	15
$^{5}/_{8}$ -inch gypsum wallboard	30

1/2-inch Type X gypsum wallboard	25
5/8-inch Type X gypsum wallboard	40
Double 3/8-inch gypsum wallboard	25
1/2-inch + 3/8-inch gypsum wallboard	35
Double 1/2-inch gypsum wallboard	40

For SI: 1 inch = 25.4 mm.
a. These values apply only when membranes are installed on framing members which are spaced 16 inches o.c. or less.
b. Gypsum wallboard installed over framing or furring shall be installed so that all edges are supported, except 5/8-inch Type X gypsum wallboard shall be permitted to be installed horizontally with the horizontal joints staggered 24 inches each side and unsupported but finished.
c. On wood frame floor/ceiling or roof/ceiling assemblies, gypsum board shall be installed with the long dimension perpendicular to framing members and shall have all joints finished.
d. The membrane on the unexposed side shall not be included in determining the fire resistance of the assembly. When dissimilar membranes are used on a wall assembly, the calculation shall be made from the least fire-resistant (weaker) side.
e. The time assigned is not a finished rating.

***IBC* TABLE 722.6.2(1):** TIME ASSIGNED TO WALLBOARD MEMBRANES[a, b, c, d, e]

Harmathy states that, "The thermal fire endurance of a construction consisting of a number of parallel layers is greater than the sum of the thermal fire endurance characteristics of the individual layers when exposed separately to the fire."

For example, in Table 722.6.2(1), a single layer of 1/2" GWB yields a membrane rating of 15 minutes. If one uses two such layers, per Table 722.6.2(1), the rating is 40 minutes, instead of the expected 30 minutes, if the membranes were simply added together. This confirms the previous statement on the addition of multiple layers. *IBC* Section 722.6.2.3 on exterior walls states:

> For an exterior wall with a fire separation distance greater than 10 feet (3048 mm), the wall is assigned a rating dependent on the interior membrane and the framing as described in Tables 722.6.2(1) and 722.6.2(2). The membrane on the exterior of the exterior wall (non-fire exposed side) with a fire separation distance greater than 10 feet (3048 mm) shall consist of sheathing, sheathing paper and siding as described in Table 722.6.2(3).

DESCRIPTION	TIME ASSIGNED TO FRAME (minutes)
Wood studs 16 inches o.c.	20
Wood floor and roof joists 16 inches o.c.	10

For SI: 1 inch = 25.4 mm.
a. This table does not apply to studs or joists spaced more than 16 inches o.c.
b. All studs shall be nominal 2 × 4 and all joists shall have a nominal thickness of not less than 2 inches.
c. Allowable spans for joists shall be determined in accordance with Sections 2308.4.2.1, 2308.7.1 and 2308.7.2.

***IBC* TABLE 722.6.2(2):** TIME ASSIGNED FOR CONTRIBUTION OF WOOD FRAME[a, b, c]

IBC Section 722.6.2.5 on additional protection states, "Table 722.6.2(5) indicates the time increments to be added to the fire resistance where glass fiber, rockwool, slag mineral wool or cellulose insulation is incorporated in the assembly."

DESCRIPTION OF ADDITIONAL PROTECTION	FIRE RESISTANCE (minutes)
Add to the fire-resistance rating of wood stud walls if the spaces between the studs are completely filled with glass fiber mineral wool batts weighing not less than 2 pounds per cubic foot (0.6 pound per square foot of wall surface) or rockwool or slag material wool batts weighing not less than 3.3 pounds per cubic foot (1 pound per square foot of wall surface), or cellulose insulation having a nominal density not less than 2.6 pounds per cubic foot.	15

For SI: 1 pound/cubic foot = 16.0185 kg/m^3.

***IBC* TABLE 722.6.2(5):** TIME ASSIGNED FOR ADDITIONAL PROTECTION

IBC Section 722.6.2.6 on fastening states, "Fastening of wood frame assemblies and the fastening of membranes to the wood framing members shall be done in accordance with Chapter 23."

Membrane Finish Rating Additive Procedures

To estimate the fire resistance ratings of a component that is part of an assembly, a key element of the assembly's performance is defined by the membrane time rating, which provides an indication of the fire side protection afforded the overall assembly by the membrane.

Method 1: IBC Section 722 Fire Endurance Performance Calculation Method

Using the additive procedures as defined by the IBC, membrane time ratings provide time values to add to the fire rating of the unprotected structural wood elements. The following approach conforms to the IBC and standards. The times for the membranes are from the membrane table of the component additive method in *IBC* Table 722.6.2(1). For 5/8" GWB, the time is 30 minutes. In the component additive method, the membrane times are added to the times for "2 x 4" studs, 16" o.c., which is defined as 20 minutes per *IBC* Table 722.6.2(2). The time assigned for additional protection is defined as 15 minutes per *IBC* Table 722.6.2(5). Therefore, the total time calculated is 65 minutes.

Method 2: Check the Wood Stud "U" and "T" Connection for Fire Endurance per the Forest Products Laboratory Wood Handbook Char Rate Calculations to Compare to the IBC Section 722 Fire Endurance Performance Calculation Method

Using the additive procedures as defined by the IBC, 2x4 studs, spaced 16" on center are assigned a time of 20 minutes. The additional framing provided by the partition intersection is not needed to sustain the applied loads during the fire event. In other words, the wall would be able to maintain the applied loads without the additional framing for the intersection provided the studs are no more than 16" on center. Therefore, this additional framing is only for the connection of the partition intersection. The presence of the additional framing does provide added assurance that the fire will not penetrate the membrane and progress into the wall cavity at this joint since the joint is directly provided with backing material in the form of the added stud. For added assurance, we'll check the char rates of these members to provide the time assigned.

The time assigned for the membranes are from the membrane table of the component additive method in *IBC* Table 722.6.2(1). For 5/8" GWB, the time is 30 minutes. In the wood handbook, the following equation is used to calculate the char rate of the studs, which will yield a fire endurance time of performance for the fire exposed extra stud attached to the wall stud:

$$C = (0.002269 + 0.00457\mu)\rho + 0.331$$

Where:

C = char rate (minutes/mm)
μ= moisture content of the wood stud
ρ= density of the wood stud (kg/m3)

ρ is given as 454kg/m3 for a moisture content of 8% and a specific gravity of 0.42.

Therefore:

$$C = (0.002269 + 0.00457(0.08))(454) + 0.331 = 1.53 \text{ minutes/mm}$$

The stud is 38.1 mm thick. The time to char through the stud that would be exposed to the fire is 1.53min/mm x 38.1mm = 58 minutes. In the component additive method, the membrane times are added to the times for "2 x 4" studs, 16" o.c., which is defined as 20 minutes per *IBC* Table 722.6.2(2). The char rate time exceeds the 20 minutes of the component additive time. Note that the time assigned to the studs in the component additive method is reflective of the time the studs will be able to sustain the load on the wall in the test. This time will be less than the char rate calculation, but since we do not need these studs to carry load, the calculation is valid. Regardless, we are only using the 20-minute assigned time and using the char rate calculation for verification. The time assigned for additional protection from the insulation is defined as 15 minutes per *IBC* Table 722.6.2(5). Therefore, the total time calculated is 65 minutes.

Assembly Fire Endurance Performance Enhancements

Additional enhancements can be made that will provide a one-hour-rated assembly as well. Harmathy states that the fire endurance of construction containing multiple layers of identical material will provide fire resistance that is greater than the sum of the individual layers. The validity of the rule is seen in *IBC* Table 722.6.2(1) for ½" GWB and double ½" GWB. The addition of another GWB layer will allow for the assembly to omit "additional protection" and still achieve a 1-hour fire rating. Per Table 722.6.2(1), double ½" GWB has a time of 40 minutes. Add that to the time assigned for contribution of wood frame (20 minutes) for a fire rating of 60 minutes without additional protection. The makeup of partition intersections is not defined by the IBC. The time assigned for the contribution of wood framing simply says that a maximum of 16" o.c. studs may be used. Closer spacing is permitted. Also, the addition of framing would only serve to increase the time the wall is able to support its full design load. As such, either a U-shaped or an L-shaped intersection may be used, and the time assigned is unchanged.

Conclusion:

The "L" intersection detail is a suitable alternative for walls constructed in accordance with the applicable codes.

IBC Section 104.11 states that:

> The provisions of this code are not intended to prevent the installation of any material or to prohibit any design or method of construction not specifically prescribed by this code, provided that any such alternative has been approved. An alternative material, design or method of construction shall be approved where the building official finds that the proposed design is satisfactory and complies with the intent of the provisions of this code, and that the material, method or work offered is, for the purpose intended, at least the equivalent of that prescribed in this code in quality, effectiveness, fire resistance, durability and safety. Where the alternative material is not approved, the building official shall respond in writing, stating the reasons why the alternative was not approved.

Building Designer Responsibility:

Unless the AHJ allows otherwise, the Construction Documents shall be prepared by a Building Designer (e.g., Owner, Registered Design Professional, etc.) for the Building and shall be in accordance with *IRC* Section R106 and *IBC* Section 107. The Construction Documents shall be accurate and reliable and shall provide the location, direction and magnitude of all applied loads and shall be in accordance with *IRC* Section 301 and *IBC* Section 1603. Construction Documents shall be submitted to the Building Official for approval and shall contain the plans, specifications and details needed for the Building Official to approve such documents.

Responsibilities:

- The information contained herein is a product, engineering or building code compliance research report prepared in accordance with the referenced building codes, testing and/or analysis using accepted engineering procedures, experience, and good technical judgment.
- Product design and code compliance quality control are the responsibility of the referenced company. Consult the referenced company for the proper detailing and application for the intended purpose. Consult your local jurisdiction or design professional to assure compliance with the local building code.
- SBCA Research Reports provide an assessment of only those attributes specifically addressed within a given report.
- The engineering evaluation was performed on the dates provided in this report, within SBCA's scope of work.

This research report is subject to periodic review and revision. For the most recent version of this report, visit sbcindustry.com. For information on the current status of this report, contact SBCA.

References:

ANSI/TPI 1 – National Design Standard for Metal Plate Connected Wood Truss Construction; Truss Plate Institute; 2007.

BOCA National Building Code; BOCA International*;* 1996.

Guidelines for Determining Fire Resistance Ratings of Building Elements; BOCA International.

International Building Code; International Code Council; 2018.

International Residential Code; International Code Council; 2018.

"The Component Additive Method for Calculating and Demonstrating Assembly Fire," *Endurance (DCA 4 – CAM for Calculating and Demonstrating Assembly Fire Endurance by the American Wood Council)*.

T.Z. Harmathy, "Ten Rules of Fire Endurance Rating," *Fire Technology*, 1(2), May 1965, pp. 93-102.

UL Fire Resistance Directory; L538, UL 356.

Uniform Building Code; 1994.