Research Report

Code-Compliant Construction of Conventionally Framed Roofs & Roof Trusses

SRR No. 1410-02

Structural Building Components Association (SBCA)

February 9, 2016

SBCA is an APPROVED SOURCE

This research report is based on practical scientific research (literature review, testing, analysis, etc.), with the goal of supporting strategic needs for code and standards development and market expansion. This research report complies with the following sections of the building code:

- *IBC* Section 104.11.1 and Section 1703.4.2 – "**Research reports.** Supporting data, where necessary to assist in the approval of materials or assemblies not specifically provided for in this code, shall consist of valid research reports from *approved sources*."
- *IBC* Section 202 – "**APPROVED SOURCE.** An independent person, firm or corporation, *approved* by the *building official*, who is competent and experienced in the application of engineering principles to materials, methods or systems analyses."

 Structural Building Components Association (SBCA) | 6300 Enterprise Lane, Madison, WI 53719 | 608-274-4849 | sbcindustry.com

Table of Contents

Introduction:

In code compliant construction of conventionally framed roofs and roof trusses, it is important to understand the related code requirements. At times, the code can be confusing or seem to omit relevant information and a poor understanding could lead a costly result both in time and money. Pertinent sections of the *2006*, *2009* and *2012 International Residential Code* (*IRC*), the 2012 *IRC* Commentary, and additional references found in the Reference section of this report were reviewed. This Structural Building Components Association (SBCA) Research Report will compile the related data and identify discrepancies or omissions. In order to meet and better understand the requirements for conventionally framed roofs and roof truss construction per *IRC* Section R802.

Applications:

Portions of a structure may be engineered using the *IBC* without the entire structure requiring engineering (IRC Section R301.1.3). The size and scope of structures for prescriptive code compliance include:

- Detached one- and two-family dwellings and townhouses with separate means of egress (IRC Section R101.2).
- Light-frame construction (platform or balloon frame) (IRC Section R301.1.2).
- Construction documents shall be of sufficient clarity to indicate the location, nature and extent of work and show **in detail*** that such work **conforms to the provisions of the code*** (IRC Section R106.1.1).
  *emphasis added.

  > Construction documents shall be of sufficient clarity to indicate the location, nature and extent of the work proposed and show in detail that it will conform to the provisions of this code and relevant laws, ordinances, rules and regulations, as determined by the building official.

- A complete load path from peak of roof to the foundation is required. See Table 1 for detailed code sections relating to maximum load types, Table 2 for loads based on the geometry of the structure, and Table 3 for loads based on Roof Geometry.

  > **R301.1 Application.** Buildings and structures, and all parts thereof, shall be constructed to safely support all loads, including dead loads, live loads, roof loads, flood loads, snow loads, wind loads and seismic loads as prescribed by this code. The construction of buildings and structures in accordance with the provisions of this code shall result in a system that provides a complete load path that meets all requirements for the transfer of all loads from their point of origin through the load-resisting elements to the foundation. Buildings and structures constructed as prescribed by this code are deemed to comply with the requirements of this section.

Loads		
Load	**Maximum Allowed**	***IRC* Code Section**
Roof Live	20 psf	R301.6/Table R301.6
Ceiling/Floor Live	10, 20, 30 or 40 psf	R301.5/Table R301.5
Snow	70 psf	R301.2.3
Wind Speed (2012)	110 mph	R301.2.1.1/Figure R301.2(4)A
Wind Speed (2006/9)	110 mph 100 mph hurricane-prone regions	R301.2.1.1
Seismic – Townhouses	SDC: C, D_0, D_1, & D_2	R301.2.2 (SDC: A & B exempt)
Seismic – 1- & 2-family	SDC: D_0, D_1, & D_2	R301.2.2 (SDC: A, B & C exempt)

Table 1: Loads

Structure Geometry		
Description	**Maximum Allowed**	***IRC* Code Section**
Story Height	10' (laterally unsupported) plus floor framing not to exceed 16" or 12' as allowed by exception	R302.3/Table R602.3(5)
Number of Stories	3 above grade plane	R101.2
Building Width (perpendicular to ridge)	36'	footnote to Table R502.5(1)
Building Length (parallel to ridge)	Not specified for wood	(CFS & ICF limited to 60')
Mean Roof Height	Up to 60' with application of adjustment factors	Table R602.3(1), Table R602.10.3(1) & R802.11

Table 2: Structure Geometry

Roof Geometry		
Description	**Maximum Allowed**	***IRC* Code Section**
Building Width (perpendicular to ridge)	40' (36' building plus max 24" overhang each side)	Footnote to Table R502.5(1)
Rafter Span	Maximum tabulated or 26'	Footnote b Table R802.5.1(1) to Table R802.5.1(8)
Ceiling Joist Span	Maximum tabulated or 26'	Footnote b Table R802.4(1) & Table R802.4 (2)
Rafter/Ceiling Joist Spacing	24" o.c.	Table R802.5.1(1) to Table R802.5.1(8) & Table R802.4(1) & Table R802.4 (2)
Roof Pitch	3/12 to 12/12 or greater[1]	Table R301.6 & R802.3

Table 3: Roof Geometry

WOOD TRUSS REQUIREMENTS

2012 IRC Section R802.10 addresses the requirements for wood metal plate connected wood trusses:

Truss Design Drawings:

> **R802.10.1 Truss design drawings.** Truss design drawings, prepared in conformance to Section R802.10.1, shall be provided to the *building official* and *approved* prior to installation. Truss design drawings shall include, at a minimum, the information specified below. Truss design drawings shall be provided with the shipment of trusses delivered to the jobsite. (Followed by a list of information to include on drawings such as loads, etc.)

Design:

> **R802.10.2 Design.** Wood trusses shall be designed in accordance with accepted engineering practice. The design and manufacture of metal-plate-connected wood trusses shall comply with ANSI/TPI 1. The truss design drawings shall be prepared by a registered professional where required by the statutes of the *jurisdiction* in which the project is to be constructed in accordance with Section R106.1.

Bracing:

> **R802.10.3 Bracing.** Trusses shall be braced to prevent rotation and provide lateral stability in accordance with the requirements specified in the *construction documents* for the building and on the individual truss design drawings. In the absence of specific bracing requirements, trusses shall be braced in accordance with accepted industry practice such as the SBCA *Building Component Safety Information (BCSI) Guide to Good Practice for Handling, Installing & Bracing of Metal Plate Connected Wood Trusses*.

[1] Less than 3/12 – structural members supporting rafters and ceiling joists shall be designed as beams (Section R802.3).

CONVENTIONAL ROOF FRAMING REQUIREMENTS

It is very important that conventionally framed roof systems comply with the provisions of the code Section R106.1.1 and Section R301.1 respectively. Load-bearing dimension lumber for rafters, trusses and ceiling joists shall be identified by a grade mark of a lumber grading or inspection agency.

> **R802.1 Identification.** Load-bearing dimension lumber for rafters, trusses and ceiling joists shall be identified by a grade mark of a lumber grading or inspection agency that has been approved by an accreditation body that complies with DOC PS 20. In lieu of a grade mark, a certificate of inspection issued by a lumber grading or inspection agency meeting the requirements of this section shall be accepted.

Roof-ceilings and ceiling joists shall be designed and constructed in accordance with the provisions of Section R802 or in accordance with *AFPA/NDS*. Spans for ceiling joists and rafters shall be in accordance with the provisions of Section R802. For other grades and species and for other loading conditions, refer to the *AWC Span Tables for Joists and Rafters*. The span of each rafter shall be measured along the horizontal projection of the rafter.

The load-bearing capacity will be defined by allowable lumber design properties as designated by the grade mark that complies with *DOC PS 20* or in accordance with *AWC/NDS*.

> **R802.2 Design and construction.** The framing details required in Section R802 apply to roofs having a minimum slope of three units vertical in 12 units horizontal (25-percent slope) or greater. Roof-ceilings shall be designed and constructed in accordance with the provisions of this chapter and Figures R606.11(1), R606.11(2) and R606.11(3) or in accordance with AFPA/NDS[2]. Components of roof-ceilings shall be fastened in accordance with Table R602.3(1).
>
> **R802.4 Allowable ceiling joist spans.** Spans for ceiling joists shall be in accordance with Tables R802.4(1) and R802.4(2). For other *grades and species and for other loading conditions, refer to the* AF&PA *Span Tables for Joists and Rafters*[3].
>
> **R802.5 Allowable rafter spans.** Spans for rafters shall be in accordance with Tables R802.5.1(1) through R802.5.1(8). For other *grades and species and for other loading conditions, refer to the* AF&PA *Span Tables for Joists and Rafters. The span of each rafter shall be measured along the horizontal projection of the rafter.*

Where the roof is constructed of engineered lumber, see manufacturer's design requirements. Where the roof is constructed of metal plate connected roof trusses, see Truss Requirements (Section R802.10).

Roof elements covered in this document (*follow hyperlinks to access details within this report*):

- Gable/Shed
- Hip/Valley
- Roof Openings
- Notches and Holes

[2] This resource is now published by the American Wood Council (AWC).
[3] This resource is now published by the American Wood Council (AWC).

ROOF ELEMENTS

Gable Roof Requirements (*follow hyperlinks on image to access details within this report*)

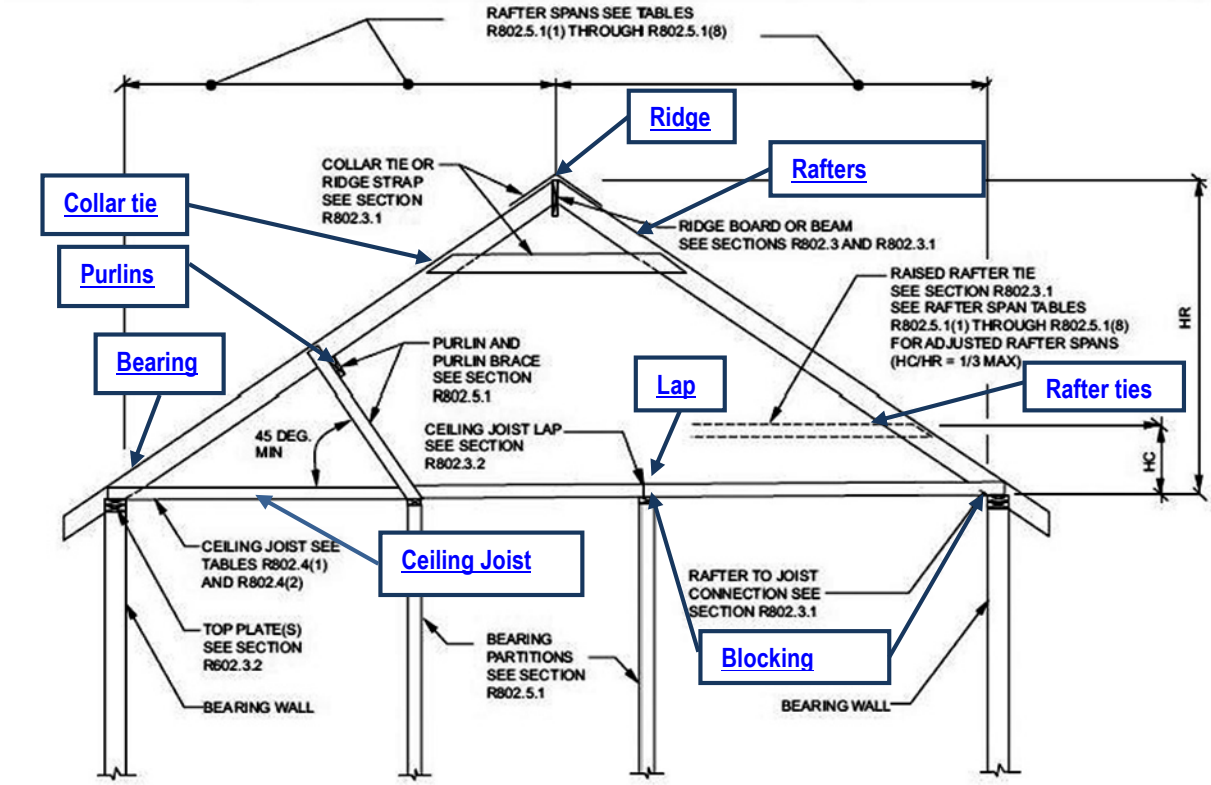

Figure 1: Gable Roof

Back to list of roof elements

RAFTER PROVISIONS (SECTION R802.3)

Select size, span and spacing of rafters relative to design specifications from rafter span tables (Table R802.5.1(1) to Table R802.5.1(8) or if obsolete due to lumber design value changes use *AWC Span Tables for Joists and Rafters* (*AWC*), adjusted per footnote a, if required.

Rafter notch shall not exceed member depth divided by 4 (Section R802.7.1), Figure 2. Rafter cantilever (overhang) shall not exceed 24" (Section R802.7.1.1) Figure 2.

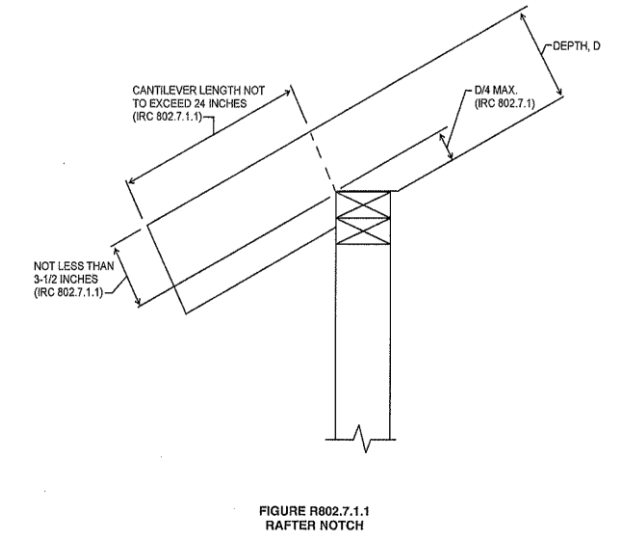

Figure 2: 2012 *IRC* Figure R802.7.1.1 Rafter Notch

Fasten rafter to wall top plate or beam:

1. Where uplift force does not exceed 200 lbs.: 3-16d box nails or 3-10d common nails with two toe nails on one side and one toe nail on the opposite side (Table R602.3(1), #5)
2. Where uplift force exceeds 200 lbs.: Connections as required by Table R802.11
3. *IRC 2006* and *2009* – Roof assemblies subject to wind uplift pressures of 20 psf or greater shall have connections as required by Table R802.11. Less than 20 psf connections shall be per Table R602.3.1.

Fasten rafter to ceiling joist: Rafter/ceiling joist connection requirements are given in Table R802.5.1(9).
Fasten rafter at ridge: See ridge details.

Return to Gable Roof Requirements

CEILING JOIST PROVISIONS (SECTION R802.4)
Select size, span and spacing of ceiling joists relative to design specifications from joist span tables (Table R802.4(1) and Table R802.4(2)) or if obsolete due to lumber any design value changes use *AWC Span Tables for Joists and Rafters* (*AWC*).

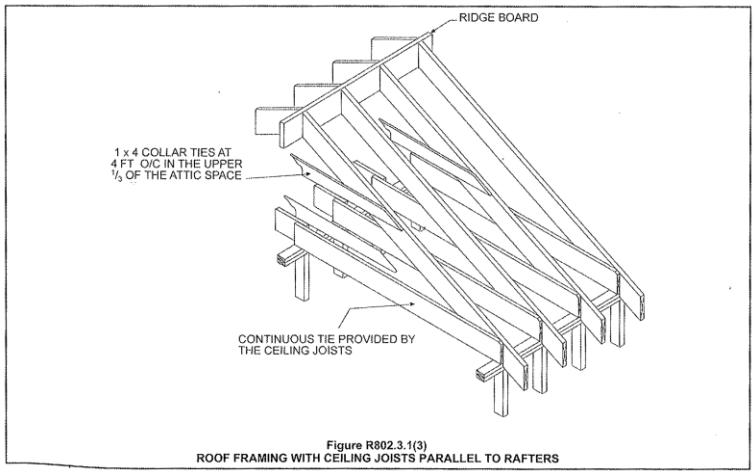

Figure 3: 2012 *IRC* Commentary Figure R802.3.1(3)
Roof Framing with Ceiling Joists Parallel to Rafters

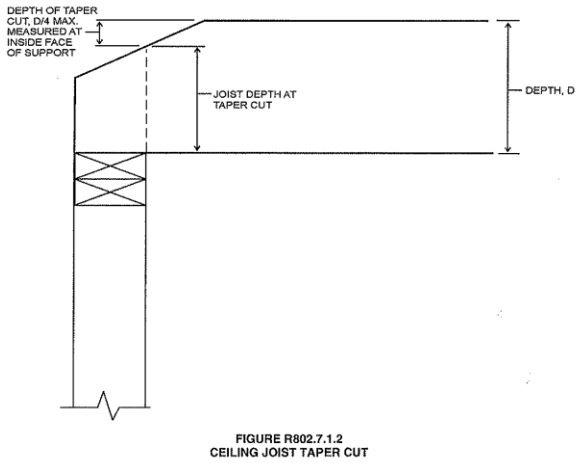

Figure 4: 2012 *IRC* Figure R802.7.1.2
Ceiling Joist Taper Cut

Ceiling joist taper cut is the depth of member divided by 4 (Section R802.7.1.2 and Figure 4).
Fasten ceiling joists to bearing wall top plate or beam: 3-8d box nails toe nailed (Table R602.3(1), #2).
Fasten joists at lap joints: See lap details.

Return to Gable Roof Requirements

BLOCKING PROVISIONS (SECTION R802.8)
Lateral support at framing bearing is required for roof or ceiling framing members that exceed a 5-to-1 ratio, to prevent rotation. Examples:

- 2x12 or greater exceeds 5-to-1 ratio.
- 2x10 and smaller does not exceed 5-to-1 ratio.
- 2x12 rafter with 2x10 ceiling joist attached does not exceed 5-to-1 ratio.

If the ratio exceeds 6-to-1, framing members are to be supported by solid blocking, diagonal bridging, or a continuous 1x3 wood strip nailed across members not exceeding 8' o.c.
Fasten lateral supports: Toe nail blocking to top plate: 3-8d box (Table R602.3(1), #1).

Return to Gable Roof Requirements

RIDGE CONNECTION PROVISIONS
If a ridge beam is used to carry the high end of rafters, design is required (Section R802.3) for both the beam and connections (Section R802.11.1.3) as well as providing for beam end load path to the foundation. If ceiling joists are not used, the ridge must be supported by a bearing wall or the ridge must be designed as a girder (Section R802.3.1). If a ridge board is used to carry the high end of rafters (Section R802.3 & Figure 5), it must be a minimum 1x__ wide and deeper than the cut end of the rafter. The rafters are to be oriented directly opposite one another (Commentary Section R802.3 & Figure 5).

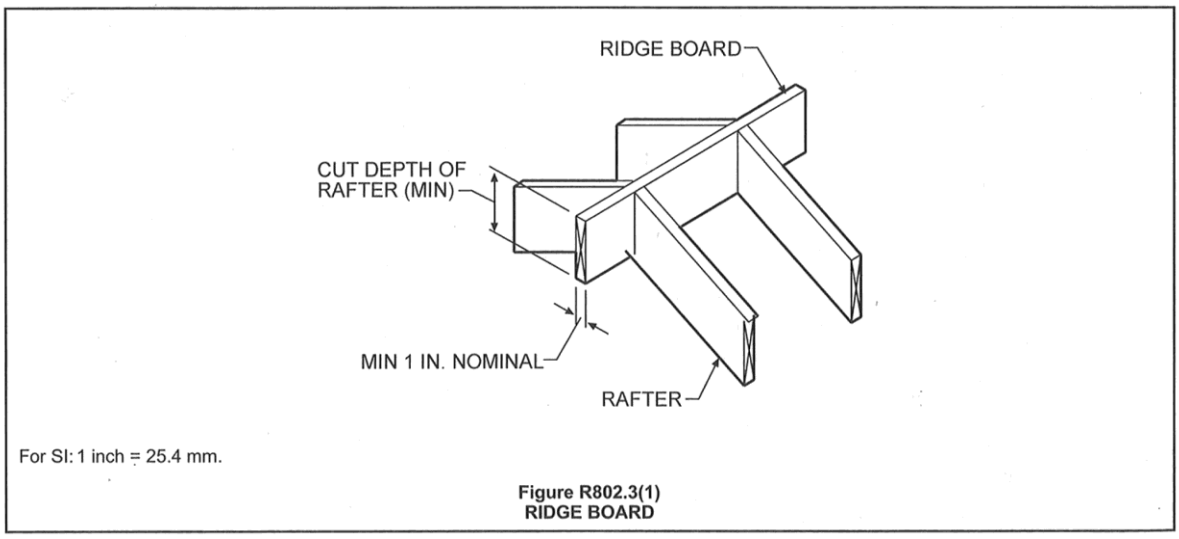

Figure 5: 2012 *IRC* Commentary
Figure R802.3(1) Ridge Board

If a gusset is used to connect the high end of the rafters (Section R802.3 & Figure 6), no specifics are given regarding gusset material.
Fasten rafters to ridge board or ridge: 4-16d box nails toe nailed or 3-16d box nails face nailed (Table R602.3(1), #6).
Fasten rafters with gusset: not listed.

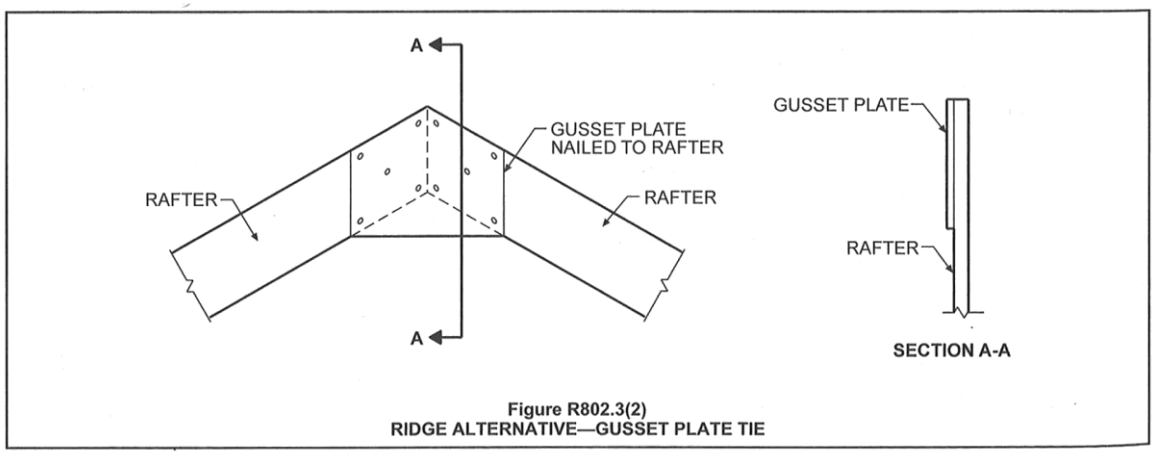

Figure 6: 2012 *IRC* Commentary Figure
R802.3(2) Ridge Alternative – Gusset Plate Tie

NOTE: Figure 6 illustrates the alternative connection using a gusset plate showing 5 nails into either rafter, but does not indicate fastener specification.

Return to Gable Roof Requirements

COLLAR TIE (SECTION R802.3.1)
Collar ties are to be a minimum 1x4 spaced not more than 4' o.c. and located in the upper third of the attic space (see Figure 3 and Figure 7), regardless of orientation of ceiling joists to rafters. Alternately, a ridge strap may be used (Section R802.3.1) ($1^1/_4$" x 20 gage) (Table R602.3(1), #4).

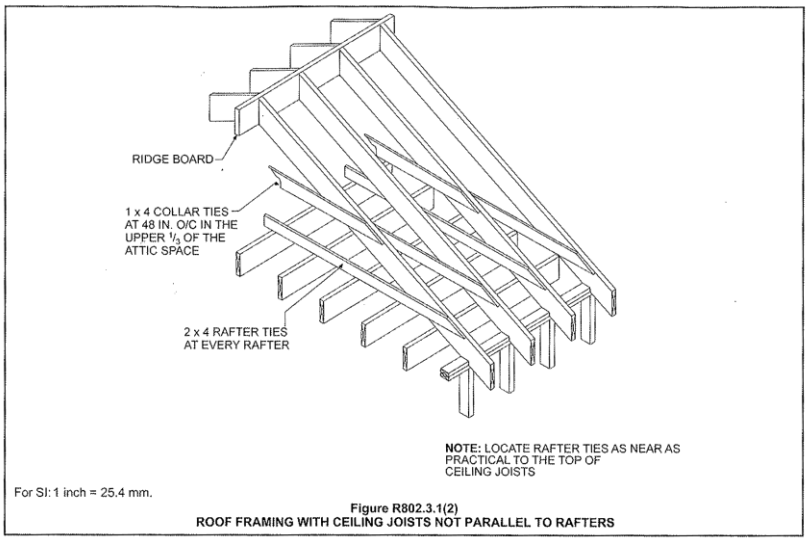

Figure 7: 2012 *IRC* Commentary Figure R802.3.1(2)
Roof Framing with Ceiling Joists Not Parallel to Rafters

Connections of collar ties to rafters and the associated thrust shall be adequately addressed in accordance with Section R802.3.1, Section R802.3.2 and Figure R802.5.1.
Fasten collar ties: 3-10d box nails face nailed (Table R602.3(1), #4).
Fasten ridge strap: none specified.

NOTE: Neither length is listed for the ridge strap nor is the fastener requirement for a ridge strap clear (Table R602.3(1), #4). The intent may be to require 3-10d box nails through the ridge strap into each rafter.

Return to Gable Roof Requirements

CEILING JOIST AS CONTINUOUS TIE WHEN PARALLEL WITH RAFTER (SECTION R802.3.1)
Joists parallel to rafters and connected to rafters at an exterior bearing wall and joists lapped or butted at an interior bearing wall shall be in accordance with Section R802.3. See Figure 3, Figure 9 and Figure 10.

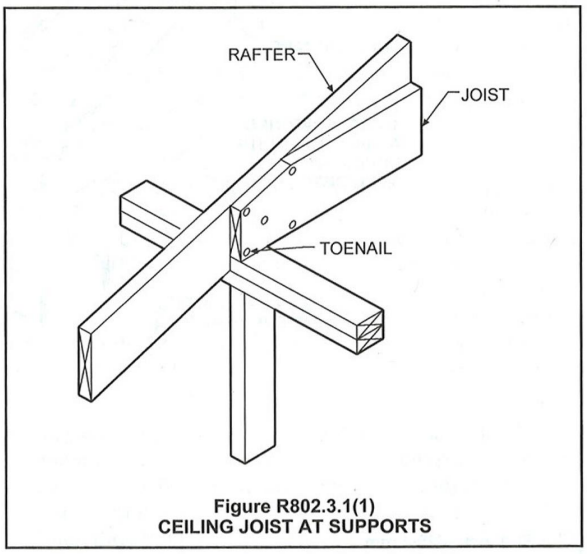

Figure 8: 2012 *IRC* Commentary
Figure R802.3.1(1) Ceiling Joist at Supports

When ceiling joists run parallel to rafters, they serve as continuous ties (Section R802.3.1). When ceiling joists do not run parallel to rafters, see Rafter Ties. Where ceiling joists are located higher than the bottom of the attic space, span reductions are required (footnotes to rafter span tables and Figure R802.5.1).

Connections of ceiling joists to rafters and the associated thrust shall be adequately addressed in accordance with Section R802.3.1, R802.3.2 and Figure R802.5.1.
Fasten ceiling joist to parallel rafter: 16d common nails as required by Table R802.5.1(9), see footnote g when ceiling joist is located higher in attic.
Fasten ceiling joist to bearing plates: 3-8d box nails toe nailed (Table R602.3(1), #3)

Return to Gable Roof Requirements

RAFTER TIES – CONTINUOUS TIES WHEN CEILING JOISTS ARE NOT PARALLEL TO RAFTERS OR WHEN JOISTS ARE PARALLEL TO RAFTERS BUT NOT CONNECTED TO RAFTERS. (SECTION R802.3.1).
When ceiling joists do not run parallel to rafters, continuous ties must be provided (Section R802.3.1) by rafter ties, which must be a minimum 2x4. Joists parallel to, but not connected to, rafters should be designed as rafter ties in accordance with Table R802.5.1(9) (see Figure 7).

Connections of raised rafter ties to rafters and the associated thrust shall be adequately addressed in accordance with Section R802.3.1, R802.3.2 and Figure R802.5.1.
Fasten rafter ties to rafters: 16d common nails per Table R802.5.1(9).

Where rafter ties are located higher than the bottom of the attic space, span reductions are required (footnotes to rafter span tables and Figure R802.5.1). Where rafter ties are substituted for ceiling joists, the heel joint connection requirement shall be taken as the tabulated heel joint connection requirement for $^2/_3$ of the actual rafter-slope (Table R802.5.1(9), footnote f). Where rafter ties are not provided, the ridge formed by the rafters is to be supported by a designed wall or girder (Section R802.3.1).

Return to Gable Roof Requirements

CEILING JOIST LAP OR BUTT JOINT (SECTION R802.3.2)
Ends of ceiling joists are to be lapped a minimum of 3" or butted over bearing partitions or beams and toe nailed (R802.3.2). Fasten laps when not resisting thrust: 3-8d box nails face nailed (Table R602.3(1), #3).

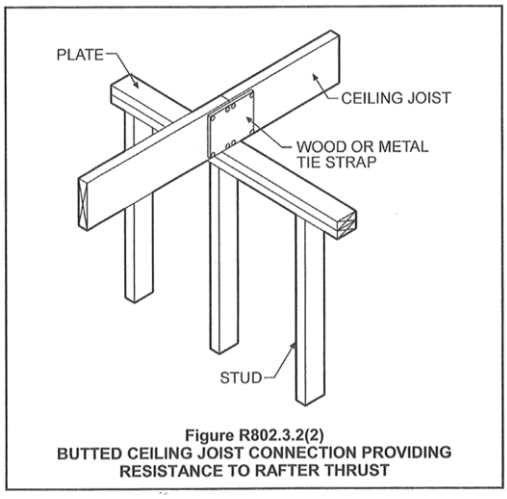

Figure 9: 2012 *IRC* Figure R802.3.2(2) Butted Ceiling Joist Connection Providing Resistance to Rafter Thrust

Fasten laps when resisting thrust: 16d common nails per Table R802.5.1(9).

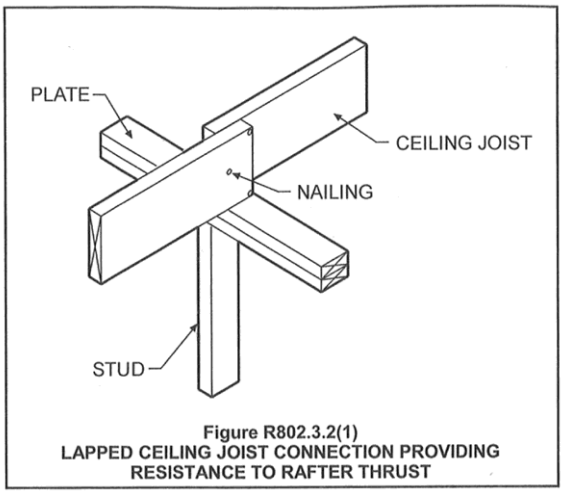

Figure 10: 2012 *IRC* Figure R802.3.2(1) Lapped Ceiling Joist Connection Providing Resistance to Rafter Thrust

Fasten butt joint when resisting thrust using tie strap: The Commentary includes Figure R802.3.2(2) (see Figure 9), which illustrates an alternate butted connection resisting thrust.

NOTE: No fastener requirement for butted connection is listed in Table R602.3.1 or Table R802.5.1(9).

Return to Gable Roof Requirements

BEARING (SECTION R802.6)
Ends of rafters and/or ceiling joists are required to have sufficient bearing on each end.

- Not less than 1½" on wood or metal on bearing wall plate or ledger.
- Not less than 3" on masonry or concrete direct or on minimum 2x sill plate providing nominal bearing of 48 square inches.

Return to Gable Roof Requirements

PURLINS AND PURLIN BRACES (SECTION R802.5.1)
Purlins and purlin braces, when used to support rafters, are to be in accordance with Section R802.5.1 and Figure R802.5.1. See also Figure 11. Purlins shall be sized no less than the rafter they support. Purlins are to be continuous.

Purlins are to be braced:

- Minimum 2x4 brace
- Installed to BEARING WALLS at not less than 45°
- Braces at max 4' o.c.
- Unbraced length not more than 8'

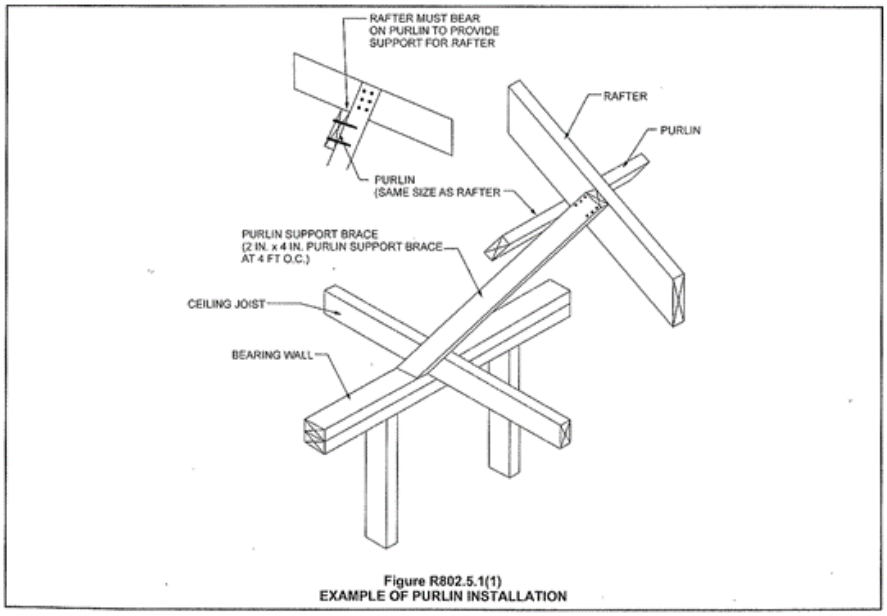

Figure 11: 2012 *IRC* Commentary
Figure R802.5.1(1) Example of Purlin Installation

Fasten purlin to rafter: not specified.
Fasten purlin to bearing: not specified.
Fasten purlin to purlin brace: not specified.
Fasten purlin brace to rafter: not specified.

NOTE: One might assume the same nail size as specified for a collar tie (3-10d (3x0.128) box face nailed) or that specified for a rafter tie (3-8d (2.5x0.113) box face nailed) – at a minimum. Figure 11 shows six (6) unspecified nails through the purlin brace into the rafter, but shows none of the other connections.

Return to Gable Roof Requirements

HIP/VALLEY ROOF REQUIREMENTS (*FOLLOW HYPERLINKS ON IMAGE TO ACCESS DETAILS*)

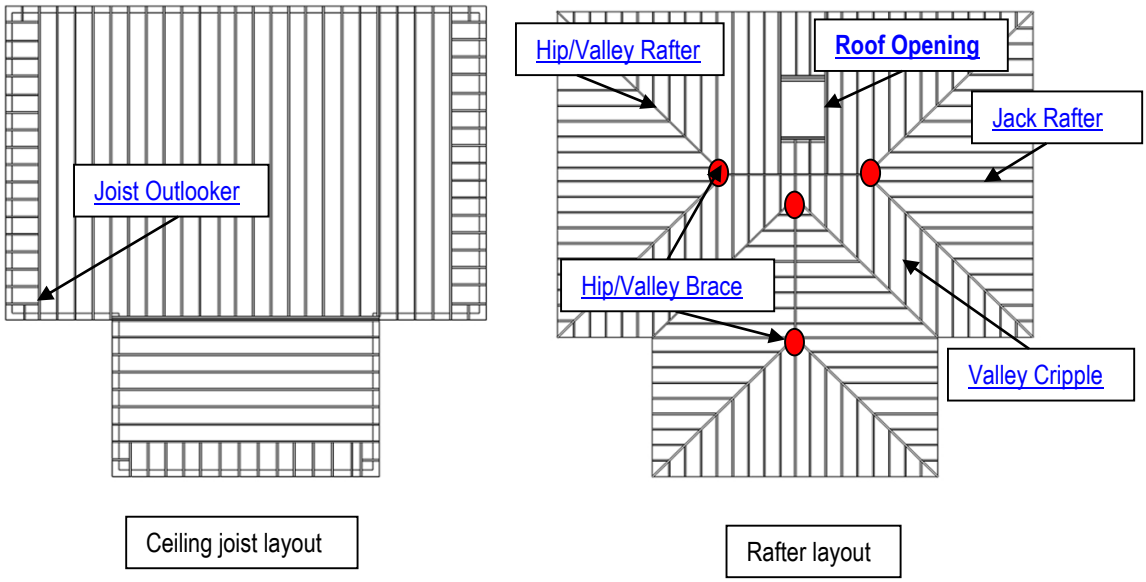

Figure 12: Hip/Valley Roof
Back to list of roof elements

HIP/VALLEY RAFTER (SECTION R802.3)
Hip/Valley rafters are to be 2x_ not less than the depth of the cut end of rafter (Section R802.3). The *IRC* does not provide a separate table for hip rafters. The size and span of the hip rafter must also be determined based on the design specifications from rafter span tables (Table R802.5.1(1) to Table R802.5.1(8)).

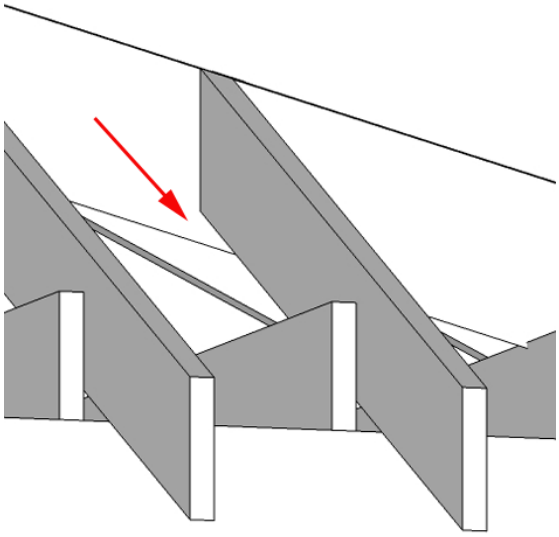

Figure 13: Hip/Valley Rafter

NOTE: If one compares the *IRC* requirements for hip rafters to the prescriptive requirements of the *Wood Frame Construction Manual* (*WFCM*)[1], one sees a significant difference.
Example: A hip or valley rafter spanning 17' (12' x 12' area) with 30 psf ground snow load and 10 psf roof dead load, the *WFCM* Table 3.28 requires two (2) 2x12s for the hip rafter. The *IRC* would allow a single 2x10 with 2x8 jack rafters framing into it.

Return to Hip/Valley Roof Requirements

Hip/Valley rafters shall be supported at the high end by a brace to a bearing partition or the support is to be designed (Section R802.3).

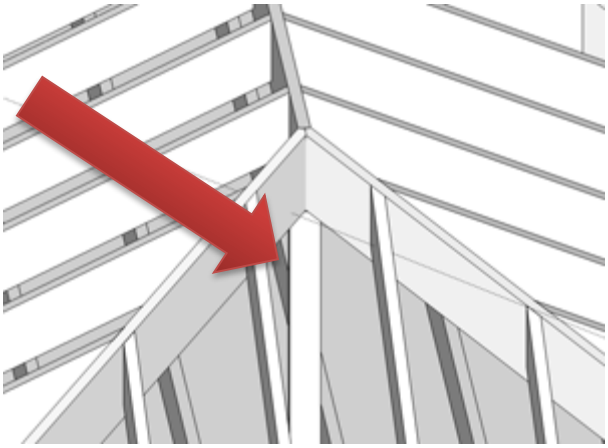

Figure 14: Hip/Valley support

NOTE: The *IRC* does not include specifications for the brace or the connection requirements of the brace to the hip rafter or to the bearing below. Note: Each hip rafter high end is to be supported, and typically a hip roof has two hip rafters meeting at the apex, so one brace should be provided for each hip rafter.
Example: A 24' hip end (hip area 12x12), snow load = 30 psf, dead load = 10 psf. The hip rafter carries half of the area (12x12/2=72 ft.^{2}). The total load 40 psf x 72 ft.^{2} =2,880 lbs. $^2/_3$ of the load of a hip rafter is carried by the high end (1921 lbs.) and $^1/_3$ by the low end (959). Each brace must be able to support 1,921 lbs. and the bearing below must support the point load from both braces (3,842 lbs.). In the case of a valley rafter, $^1/_3$ of the load is carried by the high end and $^2/_3$ by the low end.

Hip/Valley rafter notch cut is not dealt with in the *IRC* other than the standard requirement for rafters that the depth of the notch of a rafter not to exceed rafter depth divided by 4 (see Figure 2 and Section R802.7.1).

NOTE: The *IRC* only provides requirements for valley framing using valley rafters. It does not address framing a valley over the common rafters (called overframing or a California valley). This practice would have to be approved by the building code jurisdiction having authority.

Fasten hip/valley rafter to wall top plate or beam:

1. Where uplift force does not exceed 200 lbs.: 3-16d box nails or 3-10d common nails with two toe nails on one side and one toe nail on the opposite side (Table R602.3(1), #5)
2. Where uplift force exceeds 200 lbs.: Connections as required by Table R802.11.
3. *IRC 2006* and *2009* – Roof assemblies subject to wind uplift pressures of 20 psf or greater shall have connections as required by Table R802.11. Less than 20 psf connections shall be per Table R602.3.1.

Fasten hip/valley rafter to ridge: 4-16d toe nails and/or 4-16d face nails (3.5x0.135) box nails.

Return to Hip/Valley Roof Requirements

HIP JACK RAFTER

Jack rafters, spanning from bearing to hip rafter, are not specifically covered in the *IRC*. Fastener requirements would be the same as for common rafters for both the connection to low end bearing or at high end to hip rafter.

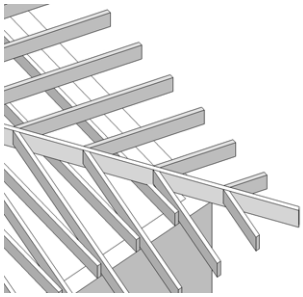

Figure 15: Hip Jack Rafter

VALLEY CRIPPLE RAFTER

Cripple rafters, spanning between ridge board and valley rafter, are not specifically covered in the *IRC*, but they would typically be of the same size as common rafters. Fastener requirements would be the same as for common rafters for both the connection to low end bearing or at high end to hip rafter.

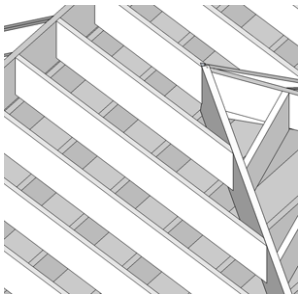

Figure 16: Valley Cripple Rafter

JOIST OUTLOOKERS

This issue is not specifically addressed in the *IRC*. However, standard joist requirements as detailed for a gable roof will apply, as well as connections.

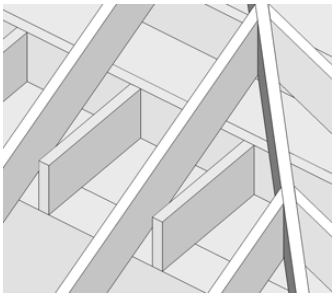

Figure 17: Joist Outlookers

Return to Hip/Valley Roof Requirements

ROOF OPENINGS (SECTION R802.9)
Roof openings shall be framed in accordance with Section R802.9. See R502.10 for floor openings and Figure 18, Figure 19 & Figure 20 for further clarification.

1. If the header span is less than 4', the header can be a single member the same size as the ceiling joist or rafter.

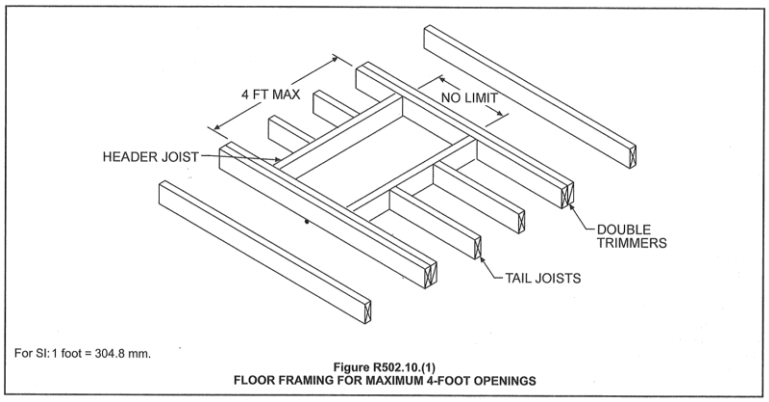

Figure 18: 2012 *IRC* Commentary Figure R502.10(1)
Floor Framing for Maximum 4 – Foot Openings

2. If the header span is 4' or greater, trimmer joists and headers are to be doubled and of sufficient cross section to support the framing into the header.

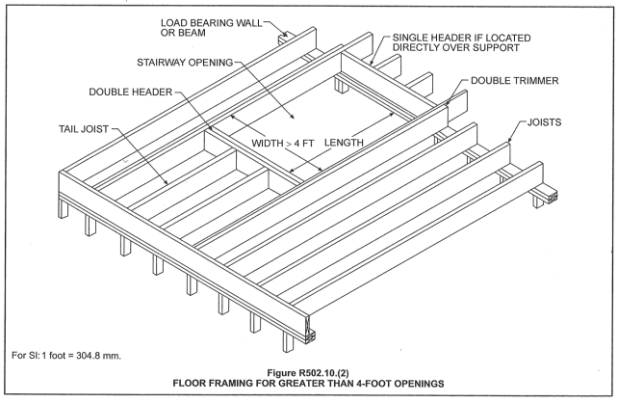

Figure 19: 2012 *IRC* Commentary Figure R502.10(2)
Floor Framing for Greater Than 4– Foot Openings

- If the header span exceeds 6', approved hangers are to be used for the header-to-trimmer connections.

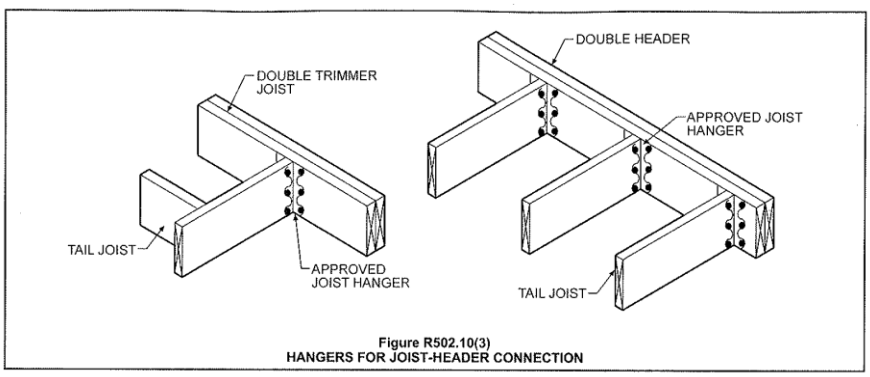

Figure 20: 2012 *IRC* Commentary Figure R502.10(3) Hangers for Joist Header Connection

Return to Roof Opening Requirements

NOTCHES AND HOLES (SECTION R802.7)
Notch and hole requirements are the same for rafters and joists (Section R802.7 /Section R502.8, Figure R502.8/Commentary Figure R502.8).

- Notches shall not exceed $^1/_6$ of member depth.
- Notches shall not be longer than $^1/_3$ the depth of the member.
- Notches shall not be located in the middle $^1/_3$ of the span.
- Notches at ends shall not exceed ¼ the depth of the member.
- Members 4" or greater in thickness are not to be notched, except at the ends.
- The diameter of holes shall not exceed $^1/_3$ the depth of the member and not closer than 2" to the top or bottom of the member or to another hole or notch.

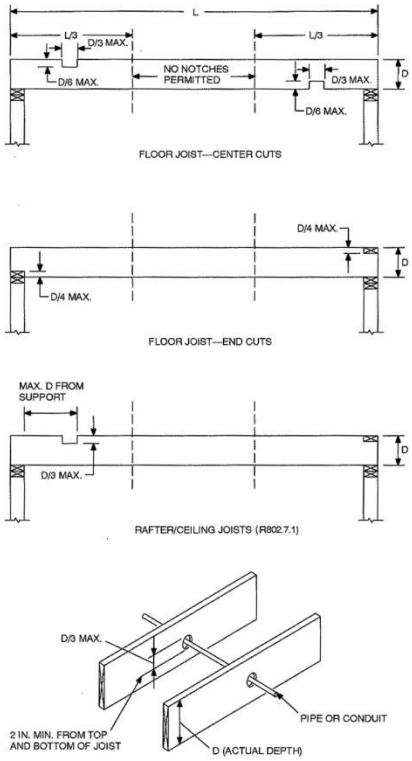

Figure 21: Notches and Holes

Return to Notches and Holes Requirements

Findings:

Conventional roof framing is complex. Complying with *IRC* Section R301, where it states that "the construction of buildings and structures in accordance with the provisions of this code shall result in a system that provides a complete load path that meets all requirements for the transfer of all loads from their point of origin through the load-resisting elements to the foundation," may not always be clearly understood or easy to do.

To be code compliant, conventional framing of a roof requires a clear understanding of all the pertinent code requirements. The *IRC* prescriptive requirements for roof framing do not cover every aspect of the framing that is needed to provide a complete load path in contemporary residential structures, such as:

- Brace design for high end of hip/valley rafters
- Brace design for rafter purlins
- Non-symmetrical hip roofs
- Roof diaphragms with plate height changes
- Large roof openings (greater than 6' wide)
- Framing connection requirements typically specify common or box nails (Table R602.3(1), footnote a).

The requirements do not include sinkers or gun nails, which generally have a smaller diameter. For a wider range of fastener options, see ISANTA Power Driven Staples and Nails, Ceiling and the Roof Framing. A number of connection requirements are not included in the *IRC,* which are critical to providing a continuous load path.

Inspection of conventional roof framing and all the complex load paths in a structure is a challenge. Any retrofit changes are expensive. The roof truss provisions in the code are found in Section R802.10. These provisions lead to a continuous load path fully compliant with Section R301. Truss design drawings are prepared to comply with Section R802.10.1 where all loads and load path resistance is defined. Bracing and related connections of trusses to the structure (R802.10.3 and R802.11), which provide for the flow of uplift and gravity loads from the roof through the permanent restraint/bracing to the structure (BCSI B3), to the foundation can be found on the truss design drawing and in code-referenced *Building Component Safety Information* (*BCSI*): *Guide to Good Practice for Handling, Installing & Bracing of Metal Plate Connected Wood Trusses*.

> **R802.10.3 Bracing.** Trusses shall be braced to prevent rotation and provide lateral stability in accordance with the requirements specified in the construction documents for the building and on the individual truss design drawings. In the absence of specific bracing requirements, trusses shall be braced in accordance with the Building Component Safety Information (BCSI 1-03) Guide to Good Practice for Handling, Installing & Bracing of Metal Plate Connected Wood Trusses.
>
> **R802.10.4 Alterations to trusses.** Truss members shall not be cut, notched, drilled, spliced or otherwise altered in any way without the approval of a registered design professional. Alterations resulting in the addition of load (e.g., HVAC equipment, water heater) that exceeds the design load for the truss shall not be permitted without verification that the truss is capable of supporting such additional loading.
>
> **R802.11.1 Uplift resistance.** Roof assemblies shall have uplift resistance in accordance with Sections R802.11.1.2 and R802.11.1.3.
>
> Where the uplift force does not exceed 200 pounds, rafters and trusses spaced not more than 24 inches (610 mm) on center shall be permitted to be attached to their supporting wall assemblies in accordance with Table R602.3(1).
>
> Where the basic wind speed does not exceed 90 mph, the wind exposure category is B, the roof pitch is 5:12 or greater, and the roof span is 32 feet (9754 mm) or less, rafters and trusses spaced not more than 24 inches (610 mm) on center shall be permitted to be attached to their supporting wall assemblies in accordance with Table R602.3(1).
>
> **R802.11.1.2 Truss uplift resistance.** Trusses shall be attached to supporting wall assemblies by connections capable of resisting uplift forces as specified on the truss design drawings. Uplift forces shall be permitted to be determined as specified by Table R802.11, if applicable, or as determined by accepted engineering practice.
>
> **R802.11.1.3 Rafter uplift resistance.** Individual rafters shall be attached to supporting wall assemblies by connections capable of resisting uplift forces as determined by Table R802.11 or as determined by accepted engineering practice. Connections for beams used in a roof system shall be designed in accordance with accepted engineering practice.

References:

1. *Building Component Safety Information* (*BCSI*): *Guide to Good Practice for Handling, Installing & Bracing of Metal Plate Connected Wood Trusses*, Structural Building Components Association and Truss Plate Institute, 2013.
2. *International Residential Code* (*IRC*), International Code Council, 2012.
3. *TPI 1 – National Design Standard for Metal Plate Connected Wood Truss Construction*, Truss Plate Institute, 2007.
4. *WCD 1 – Details for Conventional Wood Frame Construction*, American Wood Council, 2001.
5. *Wood Frame Construction Manual* (*WFCM*), American Wood Council, 2012.